REV.	CHANG DESCRIPTION	BY	DATE
D	ADD P/NS	MW	251204

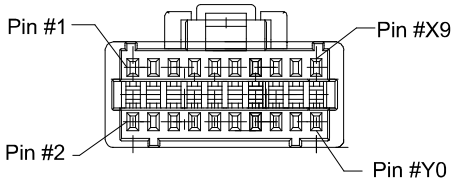

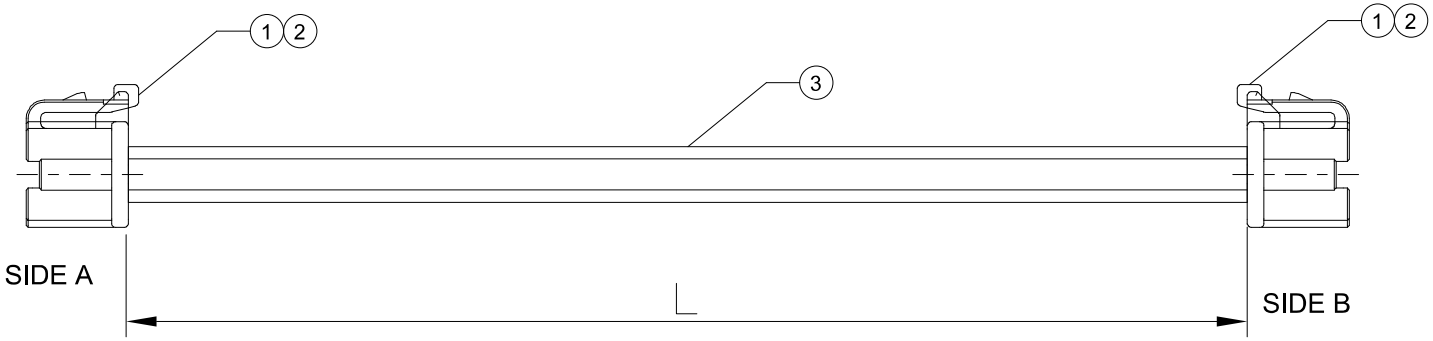

P/N LIST

Pin	HOUSING P/N	CABLE P/N	L
20	501189-2010	SP170905-021	100±5
		SP170905-022	200±5
		SP170905-023	300±5
		SP170905-024	150±10
		SP170905-025	500±10
		SP170905-026	1000±20
		SP170905-028	50±5
30	501189-3010	SP170905-031	100±5
		SP170905-032	200±5
		SP170905-033	300±5
		SP170905-034	150±10
		SP170905-035	500±10
		SP170905-036	1000±20
		SP170905-038	50±5
40	501189-4010	SP170905-041	100±5
		SP170905-042	200±5
		SP170905-043	300±5
		SP170905-044	150±10
		SP170905-045	500±10
		SP170905-046	1000±20
		SP170905-048	50±5
50	501189-5010	SP170905-051	100±5
		SP170905-052	200±5
		SP170905-053	300±5
		SP170905-054	150±10
		SP170905-055	500±10
		SP170905-056	1000±20
		SP170905-058	50±5

Part Number:
SP170905-021-BK

Color
Blank: Red
BK: Black
YW: Yellow
GN: Green
BE: Blue
WE: White
OE: Orange
GA: Gray
PE: Purple
BN: Brown

Length Code

Pin Count Code
02: 20P
03: 30P
04: 40P
05: 50P

WIRE CHART

SIDE A	WIRE SPEC	SIDE B	20Pin	30Pin	40Pin	50Pin
Pin #1	28 AWG	Pin #1	5011892010			
Pin #2	28 AWG	Pin #2				
...	28 AWG	...				
Pin #19	28 AWG	Pin #19				
Pin #20	28 AWG	Pin #20				
Pin #21	28 AWG	Pin #21		5011893010		
Pin #22	28 AWG	Pin #22				
...	28 AWG	...				
Pin #29	28 AWG	Pin #29				
Pin #30	28 AWG	Pin #30				
Pin #31	28 AWG	Pin #31			5011894010	
Pin #32	28 AWG	Pin #32				
...	28 AWG	...				
Pin #39	28 AWG	Pin #39				
Pin #40	28 AWG	Pin #40				
Pin #41	28 AWG	Pin #41				5011895010
Pin #42	28 AWG	Pin #42				
...	28 AWG	...				
Pin #49	28 AWG	Pin #49				
Pin #50	28 AWG	Pin #50				

REMARK:

1) ALL COMPONENETS MEET ROHS REQUIREMENTS.
2) THE FINISHED GOOD MEET IPC620 SPECIFICATION.

S/N	Q'TY	UNIT	DESCRIPTION
3	AR	M	UL3302, 105°C, 30V, AWG28#, COLOR SEE TABLE, OD 0.6MM
2	AR	PCS	TERMINAL, 1.0MM PITHC, GOLD PLATED, MOLEX 501193-7000
1	1	PCS	HOUSING.1.0MM PITCH, MOLEX 501189-XX10

GENERAL TOLERANCE UNLESS SPECIFIED:
0 PLC ± 1.27
1 PLC ± 0.50
2 PLC ± 0.13
3 PLC ± 0.03
4 PLC ± 0.002
ANGLES ±3°

APPROVED	P/N:	CONBEONE
RW	SEE TABLE	www.conbeone.com
CHECKED	DOC#	TITLE: MOLEX 1.00MM OTS, PICO CLASP Dual Row, 501189 Series, Dual Ends
CT	SD-SP170905	
DRAWN	CUSTOMER COPY	
MW		

SIZE	UNIT	SCALE	PAGE	REV
A4	MM	N.T.S	1 OF 1	E

THE DRAWING IS A CONTROLLED DOCUMENT FOR DONGGUAN CONBEONE TECHNOLOGY CO., LTD. IT IS SUBJECT TO CHANGE AND THE SEMPER ENGINEERING CONTROLLING ORGANIZATION SHOULD BE CONTACTED FOR LATEST REVISION