REV.	CHANG DESCRIPTION	BY	DATE
A	NEW RELEASE	MW	250829

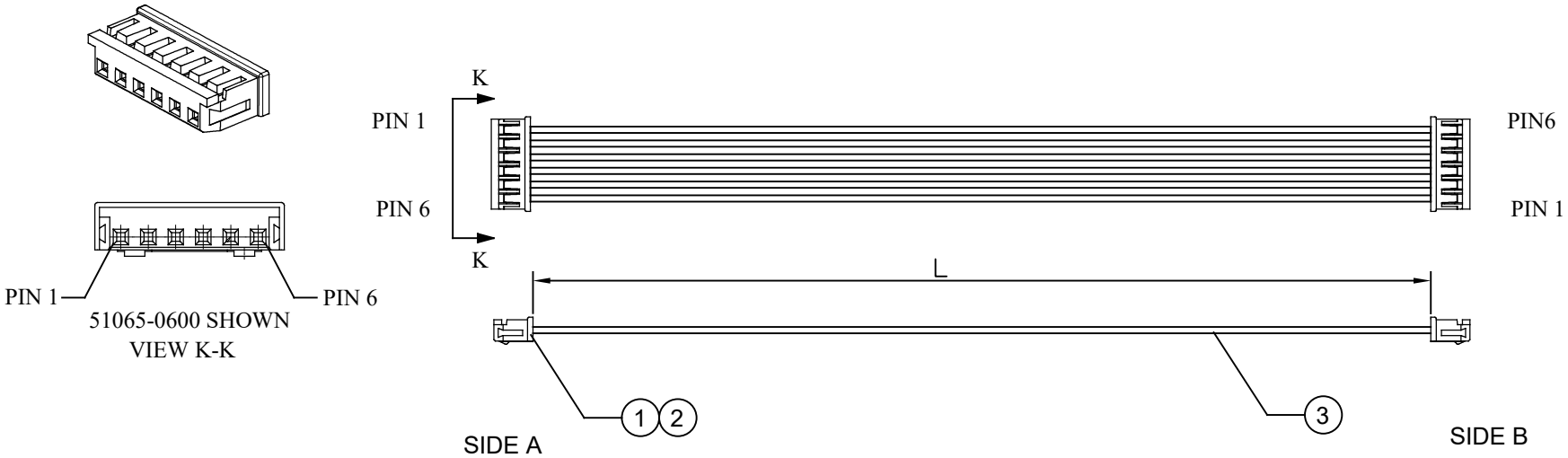

CKTS	ASS'Y P/N	L(MM)	Tolerance	HSG P/N	CKTS	ASS'Y P/N	L(MM)	Tolerance	HSG P/N	CKTS	ASS'Y P/N	L(MM)	Tolerance	HSG P/N
2	CB030561-021	100	±6	51065-0200	8	CB030561-081	100	±6	51065-0800	13	CB030561-131	100	±6	51065-1300
2	CB030561-022	200	±8	51065-0200	8	CB030561-082	200	±8	51065-0800	13	CB030561-132	200	±8	51065-1300
2	CB030561-023	300	±8	51065-0200	8	CB030561-083	300	±8	51065-0800	13	CB030561-133	300	±8	51065-1300
2	CB030561-024	500	±10	51065-0200	8	CB030561-084	500	±10	51065-0800	13	CB030561-134	500	±10	51065-1300
2	CB030561-025	1000	±10	51065-0200	8	CB030561-085	1000	±10	51065-0800	13	CB030561-135	1000	±10	51065-1300
2	CB030561-026	150	±6	51065-0200	8	CB030561-086	150	±6	51065-0800	13	CB030561-136	150	±6	51065-1300
3	CB030561-031	100	±6	51065-0300	9	CB030561-091	100	±6	51065-0900	14	CB030561-141	100	±6	51065-1400
3	CB030561-032	200	±8	51065-0300	9	CB030561-092	200	±8	51065-0900	14	CB030561-142	200	±8	51065-1400
3	CB030561-033	300	±8	51065-0300	9	CB030561-093	300	±8	51065-0900	14	CB030561-143	300	±8	51065-1400
3	CB030561-034	500	±10	51065-0300	9	CB030561-094	500	±10	51065-0900	14	CB030561-144	500	±10	51065-1400
3	CB030561-035	1000	±10	51065-0300	9	CB030561-095	1000	±10	51065-0900	14	CB030561-145	1000	±10	51065-1400
3	CB030561-036	150	±6	51065-0300	9	CB030561-096	150	±6	51065-0900	14	CB030561-146	150	±6	51065-1400
4	CB030561-041	100	±6	51065-0400	10	CB030561-101	100	±6	51065-1000	15	CB030561-151	100	±6	51065-1500
4	CB030561-042	200	±8	51065-0400	10	CB030561-102	200	±8	51065-1000	15	CB030561-152	200	±8	51065-1500
4	CB030561-043	300	±8	51065-0400	10	CB030561-103	300	±8	51065-1000	15	CB030561-153	300	±8	51065-1500
4	CB030561-044	500	±10	51065-0400	10	CB030561-104	500	±10	51065-1000	15	CB030561-154	500	±10	51065-1500
4	CB030561-045	1000	±10	51065-0400	10	CB030561-105	1000	±10	51065-1000	15	CB030561-155	1000	±10	51065-1500
4	CB030561-046	150	±6	51065-0400	10	CB030561-106	150	±6	51065-1000	15	CB030561-156	150	±6	51065-1500
5	CB030561-051	100	±6	51065-0500	11	CB030561-111	100	±6	51065-1100					
5	CB030561-052	200	±8	51065-0500	11	CB030561-112	200	±8	51065-1100					
5	CB030561-053	300	±8	51065-0500	11	CB030561-113	300	±8	51065-1100					
5	CB030561-054	500	±10	51065-0500	11	CB030561-114	500	±10	51065-1100					
5	CB030561-055	1000	±10	51065-0500	11	CB030561-115	1000	±10	51065-1100					
5	CB030561-056	150	±6	51065-0500	11	CB030561-116	150	±6	51065-1100					
6	CB030561-061	100	±6	51065-0600	12	CB030561-121	100	±6	51065-1200					
6	CB030561-062	200	±8	51065-0600	12	CB030561-122	200	±8	51065-1200					
6	CB030561-063	300	±8	51065-0600	12	CB030561-123	300	±8	51065-1200					
6	CB030561-064	500	±10	51065-0600	12	CB030561-124	500	±10	51065-1200					
6	CB030561-065	1000	±10	51065-0600	12	CB030561-125	1000	±10	51065-1200					
6	CB030561-066	150	±6	51065-0600	12	CB030561-126	150	±6	51065-1200					
7	CB030561-071	100	±6	51065-0700										
7	CB030561-072	200	±8	51065-0700										
7	CB030561-073	300	±8	51065-0700										
7	CB030561-074	500	±10	51065-0700										
7	CB030561-075	1000	±10	51065-0700										
7	CB030561-076	150	±6	51065-0700										

REMARK:

1) ROHS 2.0 COMPLIANT.
2) MEET IPC-620 SPECIFICAITON.

S/N	Q'TY	UNIT	DESCRIPTION
3	AR	M	UL1061 HOOK WIRE, 80°C, 300V, COLOR SEE TABLE, 24AWG
2	N	PCS	2.00mm PITCH MICRO LATCH FEMALE TERMINAL, MOLEX 50212-8000
1	2	PCS	2.00mm PITCH MICRO LATCH FEMALE HSG, XXP, MOLEX 51065-XX00

GENERAL TOLERANCE UNLESS SPECIFIED:
0 PLC ± 1.27
1 PLC ± 0.50
2 PLC ± 0.13
3 PLC ± 0.03
4 PLC ± 0.002
ANGLES ±3°

APPROVED: RW	P/N: SEE TABLE	CONBEONE www.conbeone.com
CHECKED: CT	DOC#: SD-CB030561	TITLE: 2.00MM PITCH OTS, WIRE HARNESS MOLEX MICRO LATCH , DUAL ENDS TYPE A, TYPE CDA
DRAWN: MW	CUSTOMER COPY	

SIZE	UNIT	SCALE	PAGE	REV
A4	MM	N.T.S	1 OF 2	A

THE DRAWING IS A CONTROLLED DOCUMENT FOR DONGGUAN CONBEONE TECHNOLOGY CO., LTD. IT IS SUBJECT TO CHANGE AND THE SEMPER ENGINEERING CONTROLLING ORGANIZATION SHOULD BE CONTACTED FOR LATEST REVISION

REV.	CHANG DESCRIPTION	BY	DATE
A	NEW RELEASE	MW	250829

51065-0200

SIDE A		SIDE B
PIN 1	Red	PIN 2
PIN 2	Black	PIN 1

51065-0300

SIDE A		SIDE B
PIN 1	Red	PIN 3
PIN 2	Black	PIN 2
PIN 3	Yellow	PIN 1

51065-0400

SIDE A		SIDE B
PIN 1	Red	PIN 4
PIN 2	Black	PIN 3
PIN 3	Yellow	PIN 2
PIN 4	Green	PIN 1

51065-0500

SIDE A		SIDE B
PIN 1	Red	PIN 5
PIN 2	Black	PIN 4
PIN 3	Yellow	PIN 3
PIN 4	Green	PIN 2
PIN 5	Blue	PIN 1

51065-0600

SIDE A		SIDE B
PIN 1	Red	PIN 6
PIN 2	Black	PIN 5
PIN 3	Yellow	PIN 4
PIN 4	Green	PIN 3
PIN 5	Blue	PIN 2
PIN 6	White	PIN 1

51065-0700

SIDE A		SIDE B
PIN 1	Red	PIN 7
PIN 2	Black	PIN 6
PIN 3	Yellow	PIN 5
PIN 4	Green	PIN 4
PIN 5	Blue	PIN 3
PIN 6	White	PIN 2
PIN 7	Orange	PIN 1

51065-0800

SIDE A		SIDE B
PIN 1	Red	PIN 8
PIN 2	Black	PIN 7
PIN 3	Yellow	PIN 6
PIN 4	Green	PIN 5
PIN 5	Blue	PIN 4
PIN 6	White	PIN 3
PIN 7	Orange	PIN 2
PIN 8	Gray	PIN 1

51065-0900

SIDE A		SIDE B
PIN 1	Red	PIN 9
PIN 2	Black	PIN 8
PIN 3	Yellow	PIN 7
PIN 4	Green	PIN 6
PIN 5	Blue	PIN 5
PIN 6	White	PIN 4
PIN 7	Orange	PIN 3
PIN 8	Gray	PIN 2
PIN 9	Purple	PIN 1

51065-1000

SIDE A		SIDE B
PIN 1	Red	PIN 10
PIN 2	Black	PIN 9
PIN 3	Yellow	PIN 8
PIN 4	Green	PIN 7
PIN 5	Blue	PIN 6
PIN 6	White	PIN 5
PIN 7	Orange	PIN 4
PIN 8	Gray	PIN 3
PIN 9	Purple	PIN 2
PIN 10	Brown	PIN 1

GENERAL TOLERANCE UNLESS SPECIFIED:
0 PLC ± 1.27
1 PLC ± 0.50
2 PLC ± 0.13
3 PLC ± 0.03
4 PLC ± 0.002
ANGLES ±3°

THE DRAWING IS A CONTROLLED DOCUMENT FOR DONGGUAN CONBEONE TECHNOLOGY CO., LTD. IT IS SUBJECT TO CHANGE AND THE SEMPER ENGINEERING CONTROLLING ORGANIZATION SHOULD BE CONTACTED FOR LATEST REVISION

APPROVED	P/N:	CONBEONE
RW	SEE TABLE	www.conbeone.com
CHECKED	DOC#	TITLE: 2.00MM PITCH OTS, WIRE HARNESS MOLEX MICRO LATCH , DUAL ENDS TYPE A, TYPE CDA
CT	SD-CB030561	
DRAWN	CUSTOMER COPY	
MW		

SIZE	UNIT	SCALE	PAGE	REV
A4	MM	N.T.S	2 OF 2	A