REV.	CHANG DESCRIPTION	BY	DATE
A	NEW RELEASE	MW	250829

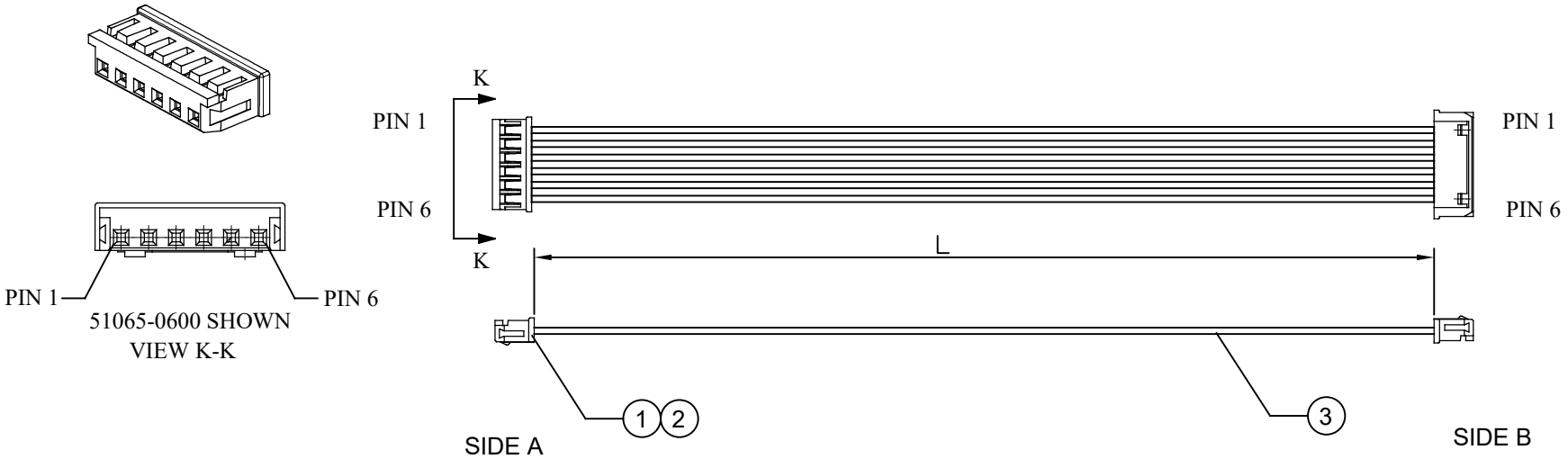

CKTS	ASS'Y P/N	L(MM)	Tolerance	HSG P/N	CKTS	ASS'Y P/N	L(MM)	Tolerance	HSG P/N	CKTS	ASS'Y P/N	L(MM)	Tolerance	HSG P/N
2	CB030559-021	100	±6	51065-0200	8	CB030559-081	100	±6	51065-0800	13	CB030559-131	100	±6	51065-1300
2	CB030559-022	200	±8	51065-0200	8	CB030559-082	200	±8	51065-0800	13	CB030559-132	200	±8	51065-1300
2	CB030559-023	300	±8	51065-0200	8	CB030559-083	300	±8	51065-0800	13	CB030559-133	300	±8	51065-1300
2	CB030559-024	500	±10	51065-0200	8	CB030559-084	500	±10	51065-0800	13	CB030559-134	500	±10	51065-1300
2	CB030559-025	1000	±10	51065-0200	8	CB030559-085	1000	±10	51065-0800	13	CB030559-135	1000	±10	51065-1300
2	CB030559-026	150	±6	51065-0200	8	CB030559-086	150	±6	51065-0800	13	CB030559-136	150	±6	51065-1300
3	CB030559-031	100	±6	51065-0300	9	CB030559-091	100	±6	51065-0900	14	CB030559-141	100	±6	51065-1400
3	CB030559-032	200	±8	51065-0300	9	CB030559-092	200	±8	51065-0900	14	CB030559-142	200	±8	51065-1400
3	CB030559-033	300	±8	51065-0300	9	CB030559-093	300	±8	51065-0900	14	CB030559-143	300	±8	51065-1400
3	CB030559-034	500	±10	51065-0300	9	CB030559-094	500	±10	51065-0900	14	CB030559-144	500	±10	51065-1400
3	CB030559-035	1000	±10	51065-0300	9	CB030559-095	1000	±10	51065-0900	14	CB030559-145	1000	±10	51065-1400
3	CB030559-036	150	±6	51065-0300	9	CB030559-096	150	±6	51065-0900	14	CB030559-146	150	±6	51065-1400
4	CB030559-041	100	±6	51065-0400	10	CB030559-101	100	±6	51065-1000	15	CB030559-151	100	±6	51065-1500
4	CB030559-042	200	±8	51065-0400	10	CB030559-102	200	±8	51065-1000	15	CB030559-152	200	±8	51065-1500
4	CB030559-043	300	±8	51065-0400	10	CB030559-103	300	±8	51065-1000	15	CB030559-153	300	±8	51065-1500
4	CB030559-044	500	±10	51065-0400	10	CB030559-104	500	±10	51065-1000	15	CB030559-154	500	±10	51065-1500
4	CB030559-045	1000	±10	51065-0400	10	CB030559-105	1000	±10	51065-1000	15	CB030559-155	1000	±10	51065-1500
4	CB030559-046	150	±6	51065-0400	10	CB030559-106	150	±6	51065-1000	15	CB030559-156	150	±6	51065-1500
5	CB030559-051	100	±6	51065-0500	11	CB030559-111	100	±6	51065-1100					
5	CB030559-052	200	±8	51065-0500	11	CB030559-112	200	±8	51065-1100					
5	CB030559-053	300	±8	51065-0500	11	CB030559-113	300	±8	51065-1100					
5	CB030559-054	500	±10	51065-0500	11	CB030559-114	500	±10	51065-1100					
5	CB030559-055	1000	±10	51065-0500	11	CB030559-115	1000	±10	51065-1100					
5	CB030559-056	150	±6	51065-0500	11	CB030559-116	150	±6	51065-1100					
6	CB030559-061	100	±6	51065-0600	12	CB030559-121	100	±6	51065-1200					
6	CB030559-062	200	±8	51065-0600	12	CB030559-122	200	±8	51065-1200					
6	CB030559-063	300	±8	51065-0600	12	CB030559-123	300	±8	51065-1200					
6	CB030559-064	500	±10	51065-0600	12	CB030559-124	500	±10	51065-1200					
6	CB030559-065	1000	±10	51065-0600	12	CB030559-125	1000	±10	51065-1200					
6	CB030559-066	150	±6	51065-0600	12	CB030559-126	150	±6	51065-1200					
7	CB030559-071	100	±6	51065-0700										
7	CB030559-072	200	±8	51065-0700										
7	CB030559-073	300	±8	51065-0700										
7	CB030559-074	500	±10	51065-0700										
7	CB030559-075	1000	±10	51065-0700										
7	CB030559-076	150	±6	51065-0700										

WIRE CHART:

SIDE A		SIDE B	Housing P/N
PIN 1	Black	PIN 1	
PIN 2	Black	PIN 2	51065-0200
PIN 3	Black	PIN 3	51065-0300
PIN 4	Black	PIN 4	51065-0400
PIN 5	Black	PIN 5	51065-0500
PIN 6	Black	PIN 6	51065-0600
PIN 7	Black	PIN 7	51065-0700
PIN 8	Black	PIN 8	51065-0800
PIN 9	Black	PIN 9	51065-0900
PIN 10	Black	PIN 10	51065-1000
PIN 11	Black	PIN 11	51065-1100
PIN 12	Black	PIN 12	51065-1200
PIN 13	Black	PIN 13	51065-1300
PIN 14	Black	PIN 14	51065-1400
PIN 15	Black	PIN 15	51065-1500

REMARK:

1) ROHS 2.0 COMPLIANT.
2) MEET IPC-620 SPECIFICAITON.

S/N	Q'TY	UNIT	DESCRIPTION
3	AR	M	UL1061 HOOK WIRE, 80°C, 300V, BLACK, 24AWG
2	N	PCS	2.00mm PITCH MICRO LATCH FEMALE TERMINAL, MOLEX 50212-8000
1	1	PCS	2.00mm PITCH MICRO LATCH FEMALE HSG, XXP, MOLEX 51065-XX00

GENERAL TOLERANCE UNLESS SPECIFIED:
0 PLC ± 1.27
1 PLC ± 0.50
2 PLC ± 0.13
3 PLC ± 0.03
4 PLC ± 0.002
ANGLES ±3°

APPROVED: RW	P/N: SEE TABLE	CONBEONE www.conbeone.com
CHECKED: CT	DOC#: SD-CB030559	TITLE: 2.00MM PITCH OTS, WIRE HARNESS MOLEX MICRO LATCH , DUAL ENDS TYPE B, TYPE BDB
DRAWN: MW	CUSTOMER COPY	

SIZE	UNIT	SCALE	PAGE	REV
A4	MM	N.T.S	1 OF 1	A

THE DRAWING IS A CONTROLLED DOCUMENT FOR DONGGUAN CONBEONE TECHNOLOGY CO., LTD. IT IS SUBJECT TO CHANGE AND THE SEMPER ENGINEERING CONTROLLING ORGANIZATION SHOULD BE CONTACTED FOR LATEST REVISION